SPEED LIMIT 5
THIS IS A SMOKE FREE WORKPLACE

NAVSEA DISTRIBUTION STATEMENT A: APPROVED FOR PUBLIC RELEASE; DISTRIBUTION UNLIMITED

REVISIONS

ZONE	REV.	DESCRIPTION	DATE	APPROVED
ALL	A	1. REVISED COMPARTMENT NAMES TO PROVIDE UNIQUE IDENTIFIERS. 2. RELOC PHSE CONSOLES TO SUIT PANAMA CANAL. RELOC COFFEE MESS TO SUIT STATUS BOARD. 3. REV TRASH/INCINERATOR RM. 4. DEL OFFICE, MNDK STBD. RELOC MESS HEAD TO PASSAGE STBD. 5. REV MESS SEATING. 6. IN SCULLERY, DEL SILVERWARE SINK AND POT SINKS. 7. FOCSLE DK FWD, REV LKR DOOR LOCATION 8. 1ST PLATF, REV MCHRY FLAT STBD. 9. HOLD & 1st PLATF, REV FO WING TK 1, DIAG BHD P/S AT BHD 29 FROM 9'–11" TO 9'–6" OCL.	MSH 1/16/12	CC

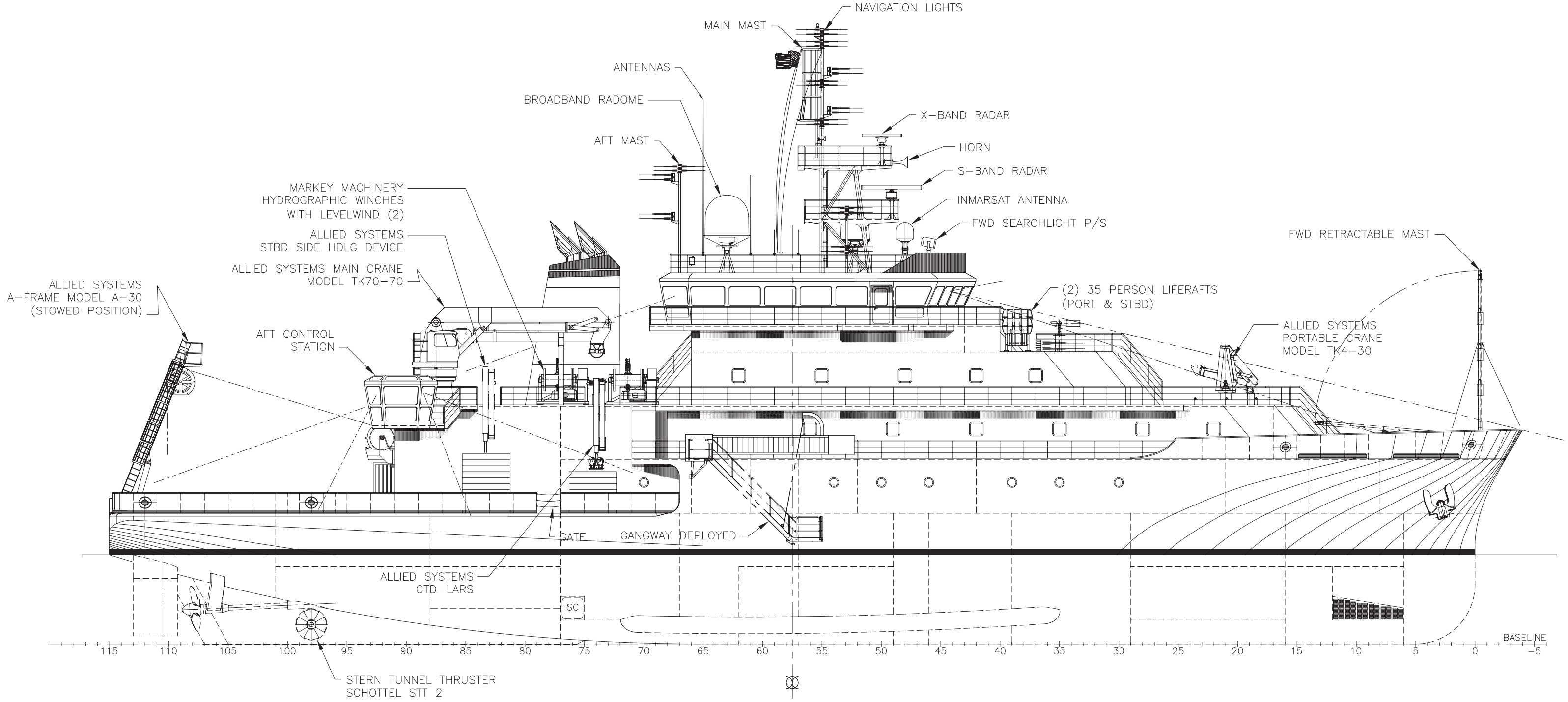
NAVIGATION LIGHTS
MAIN MAST
ANTENNAS
BROADBAND RADOME
X–BAND RADAR
HORN
AFT MAST
S–BAND RADAR
MARKEY MACHINERY
HYDROGRAPHIC WINCHES
WITH LEVELWIND (2)
INMARSAT ANTENNA
ALLIED SYSTEMS
STBD SIDE HDLG DEVICE
FWD SEARCHLIGHT P/S
FWD RETRACTABLE MAST
ALLIED SYSTEMS MAIN CRANE
MODEL TK70–70
ALLIED SYSTEMS
A–FRAME MODEL A–30
(STOWED POSITION)
(2) 35 PERSON LIFERAFTS
(PORT & STBD)
AFT CONTROL
STATION
ALLIED SYSTEMS
PORTABLE CRANE
MODEL TK4–30
GATE
GANGWAY DEPLOYED
ALLIED SYSTEMS
CTD–LARS
SC
BASELINE
115 110 105 100 95 90 85 80 75 70 65 60 55 50 45 40 35 30 25 20 15 10 5 0 –5
STERN TUNNEL THRUSTER
SCHOTTEL STT 2

VESSEL CHARACTERISTICS

(APPROXIMATE)

LENGTH OVERALL = 238'–0"
WATERLINE LENGTH = 230'–0"
RULE LENGTH = 220'–9.6"
MAXIMUM BREADTH (MOLDED) = 50'–0"
DEPTH TO MNDK = 22'–0"
DESIGN DRAFT = 15'–0"
SCANTLING DRAFT = 17'–0"
DESIGN SPEED = 12 KNOTS

PROPULSION:	DIESEL ELECTRIC
PROPULSION MOTORS:	(2) SIEMENS AC MOTORS RATED FOR 876 kW EA @ 200 RPM
MAIN GENERATORS:	(4) MTU 8V4000 M33/AVK DSG RATED FOR 1,040 kW EA @ 1800 RPM
EMERGENCY GENERATOR:	(1) KOHLER 180EOZC RATED FOR 180 kW @ 1800 RPM
BOW THRUSTER:	(1) WHITE GILL 40T3S MK.V–QR, RATED FOR 686 kW @ 677 RPM
STERN THRUSTER:	(1) SCHOTTEL STT 2 FP RATED FOR 620 kW @ 1470 RPM
CLASS NOTATION:	ABS XA1, Ⓔ, XAMS, XACCU, NIBS, ICE CLASS D0, UWILD, OCEANOGRAPHIC RESEARCH VESSEL, UNRESTRICTED SERVICE

VESSEL CAPACITIES

(APPROXIMATE)

FUEL OIL @ 98% = 145,619 GALS (INCL DAY TKS)
FUEL OIL DAY TANKS @ 98% = 8,000 GALS
FUEL OIL OVERFLOW TK @ 98% = 2,297 GALS
POTABLE WATER @ 100% = 14,604 GALS
BALLAST @ 100% = 147,512 GALS
ANTI–ROLL TANK @100% = 7,917 GALS
SEWAGE HOLDING @ 98% = 4,223 GALS
TREATED SEWAGE HLDG TK @ 98% = 11,955 GALS
WASTE OIL TANK @ 98% = 5,177 GALS
OILY BILGE TANK @ 98% = 5,497 GALS

ACCOMMODATIONS:	(20) SINGLE STATEROOMS (12) DOUBLE STATEROOMS (1) SINGLE HOSPITAL

BULKHEAD LEGEND

═══	WATERTIGHT/A60 BHD
═══	NT STEEL BHD
───	JOINER BHD

HALF SIZE PRINT

DWG	TITLE
2. 54308–171–01	MAST & FLAGSTAFF DWG
1. 54308–422–01	NAVIGATION LIGHTS

REFERENCES

APPROVALS
USCG
ABS
OWNER

HULL NO. 58	DESIGNER GUIDO PERLA & ASSOCIATES, Inc. 701 FIFTH AVENUE, SUITE 1200 SEATTLE, WA. 98104 U.S.A. Tel: (206) 768–1515 Fax: (206) 768–9700 Email: gpa@gpai.com
CAGE CODE 0W7U3	SHIPBUILDER DAKOTA CREEK INDUSTRIES, Inc. 820 FOURTH STREET, P.O. BOX 218 ANACORTES, WA 98221 Tel: (360) 293–9575 Fax: (360) 293–6453
NAVSEA DWG. No. 8565942	PROJECT OCEAN CLASS AGOR
ESWBS 801–01	TITLE GENERAL ARRANGMENT PROFILE

DWN GTH	DATE 04/20/10	D	DWG No. 65411–801–01	REV. A	
CKD CC	DATE 04/20/10				
APVD –	DATE –				
APVD –	DATE –	SCALE 3/32" = 1'–0"		SHEET: 1 OF 6	

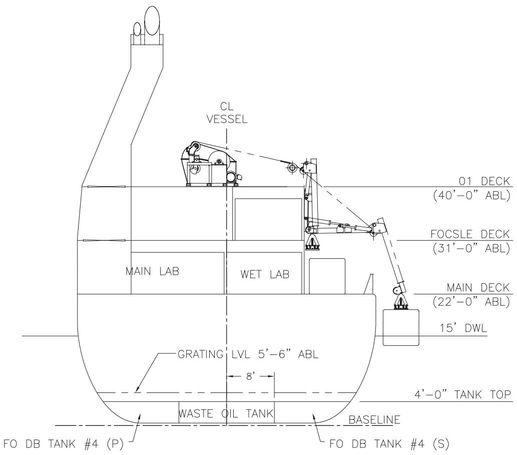
CL
VESSEL
01 DECK
(40'-0" ABL)
FOCSLE DECK
(31'-0" ABL)
MAIN LAB
WET LAB
MAIN DECK
(22'-0" ABL)
15' DWL
GRATING LVL 5'-6" ABL
8'
4'-0" TANK TOP
WASTE OIL TANK
BASELINE
FO DB TANK #4 (P)
FO DB TANK #4 (S)

SECTION FR 74
LKG FWD

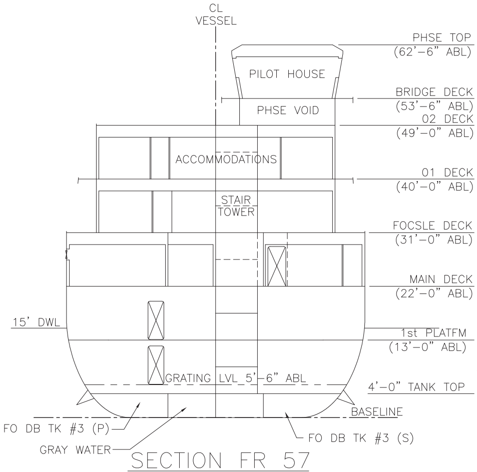
CL
VESSEL
PHSE TOP
(62'-6" ABL)
PILOT HOUSE
BRIDGE DECK
(53'-6" ABL)
PHSE VOID
02 DECK
(49'-0" ABL)
ACCOMMODATIONS
01 DECK
(40'-0" ABL)
STAIR
TOWER
FOCSLE DECK
(31'-0" ABL)
MAIN DECK
(22'-0" ABL)
15' DWL
1st PLATFM
(13'-0" ABL)
GRATING LVL 5'-6" ABL
4'-0" TANK TOP
BASELINE
FO DB TK #3 (P)
GRAY WATER
FO DB TK #3 (S)

SECTION FR 57
LKG FWD

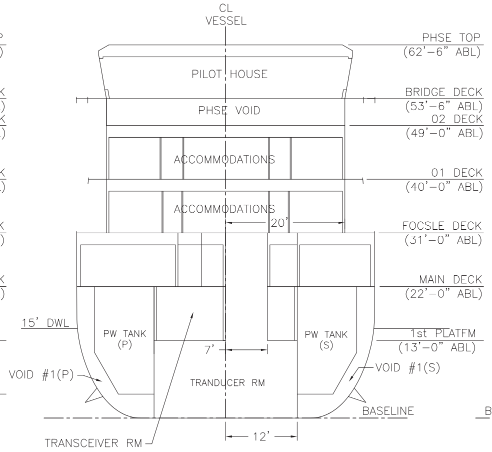
CL
VESSEL
PHSE TOP
(62'-6" ABL)
PILOT HOUSE
BRIDGE DECK
(53'-6" ABL)
PHSE VOID
02 DECK
(49'-0" ABL)
ACCOMMODATIONS
01 DECK
(40'-0" ABL)
ACCOMMODATIONS
20'
FOCSLE DECK
(31'-0" ABL)
MAIN DECK
(22'-0" ABL)
15' DWL
PW TANK
(P)
PW TANK
(S)
1st PLATFM
(13'-0" ABL)
7'
VOID #1(P)
VOID #1(S)
TRANDUCER RM
BASELINE
12'
TRANSCEIVER RM

SECTION FR 48
LKG FWD

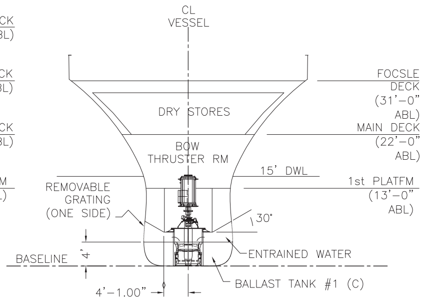
CL
VESSEL
FOCSLE
DECK
(31'-0"
ABL)
DRY STORES
MAIN DECK
(22'-0"
ABL)
BOW
THRUSTER RM
15' DWL
1st PLATFM
(13'-0"
ABL)
REMOVABLE
GRATING
(ONE SIDE)
30°
ENTRAINED WATER
BASELINE
4'
4'-1.00"
BALLAST TANK #1 (C)

SECTION FR 10
LKG FWD

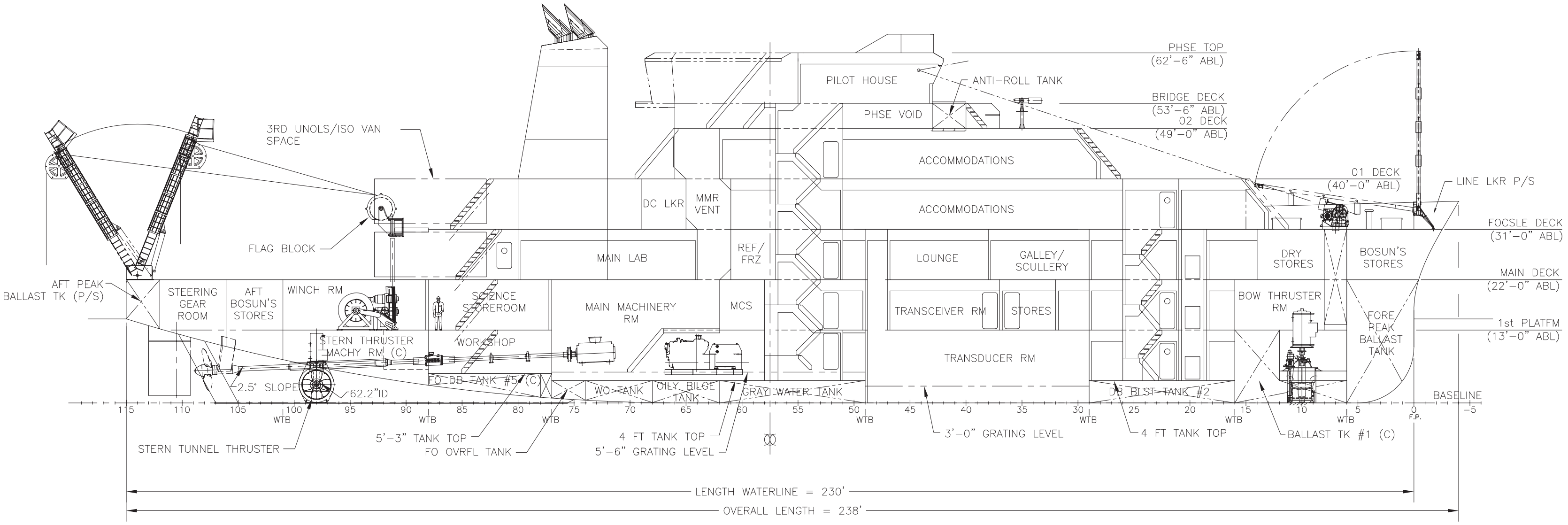
PHSE TOP
(62'-6" ABL)
PILOT HOUSE
ANTI-ROLL TANK
PHSE VOID
BRIDGE DECK
(53'-6" ABL)
02 DECK
(49'-0" ABL)
3RD UNOLS/ISO VAN
SPACE
ACCOMMODATIONS
ACCOMMODATIONS
01 DECK
(40'-0" ABL)
LINE LKR P/S
DC LKR
MMR
VENT
FLAG BLOCK
MAIN LAB
REF/
FRZ
LOUNGE
GALLEY/
SCULLERY
DRY
STORES
BOSUN'S
STORES
FOCSLE DECK
(31'-0" ABL)
AFT PEAK
BALLAST TK (P/S)
STEERING
GEAR
ROOM
AFT
BOSUN'S
STORES
WINCH RM
SCIENCE
STOREROOM
MAIN MACHINERY
RM
MCS
TRANSCEIVER RM
STORES
BOW THRUSTER
RM
FORE
PEAK
BALLAST
TANK
MAIN DECK
(22'-0" ABL)
1st PLATFM
(13'-0" ABL)
STERN THRUSTER
MACHY RM (C)
WORKSHOP
TRANSDUCER RM
2.5' SLOPE
62.2"ID
FO DB TANK #5 (C)
WO TANK
OILY BILGE
TANK
GRAY WATER TANK
DB BLST TANK #2
BASELINE
115
110
105
100
95
90
85
80
75
70
65
60
55
50
45
40
35
30
25
20
15
10
5
0
-5
WTB
WTB
WTB
WTB
WTB
WTB
WTB
F.P.
STERN TUNNEL THRUSTER
5'-3" TANK TOP
FO OVRFL TANK
4 FT TANK TOP
5'-6" GRATING LEVEL
3'-0" GRATING LEVEL
4 FT TANK TOP
BALLAST TK #1 (C)
LENGTH WATERLINE = 230'
OVERALL LENGTH = 238'

INBOARD PROFILE
FRAME SPACING 24" THROUGHOUT

OC AGOR

HALF SIZE
PRINT

DESIGNER GUIDO PERLA & ASSOCIATES, Inc.	TITLE GENERAL ARRANGMENT SECTIONS		
SHIPBUILDER DAKOTA CREEK INDUSTRIES, Inc.	D	DWG No. 65411-801-01	REV. A
NAVSEA DWG No. 8565942	SCALE 3/32" = 1'-0"	SHEET: 2 OF 6	

8 7 6 5 4 3 2 1

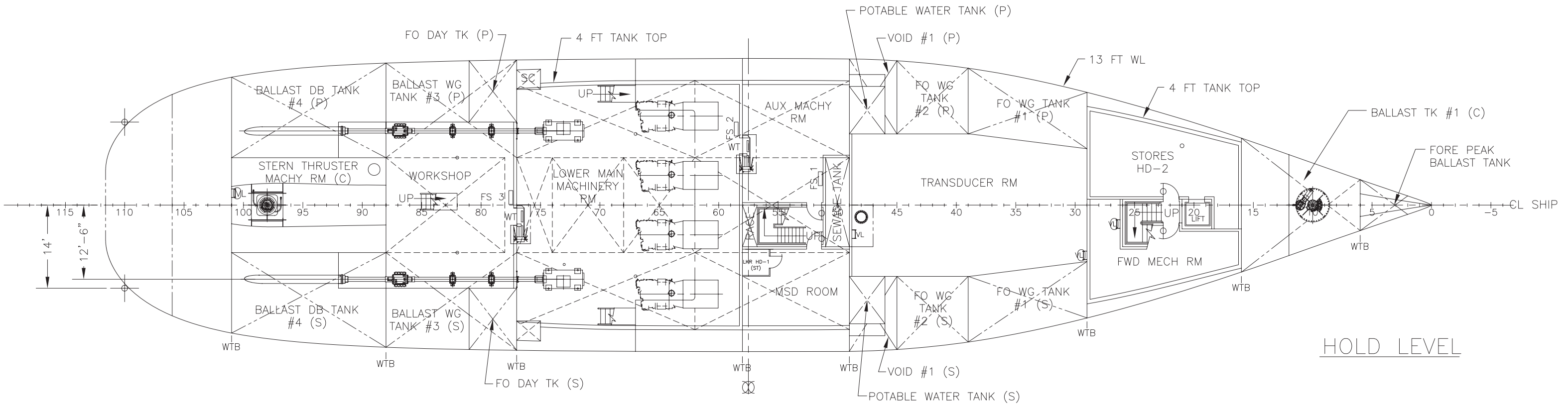
POTABLE WATER TANK (P)
FO DAY TK (P)
4 FT TANK TOP
VOID #1 (P)
13 FT WL
4 FT TANK TOP
BALLAST TK #1 (C)
FORE PEAK BALLAST TANK
BALLAST DB TANK #4 (P)
BALLAST WG TANK #3 (P)
SC
UP
AUX MACHY RM
FS 2
WT
FO WG TANK #2 (P)
FO WG TANK #1 (P)
STORES HD-2
STERN THRUSTER MACHY RM (C)
WORKSHOP
LOWER MAIN MACHINERY RM
TRANSDUCER RM
FS 1
SEWAGE TANK
UP
FS 3
WT
VL
VL
LIFT
FWD MECH RM
CL SHIP
115
110
105
100
95
90
85
80
75
70
65
60
55
50
45
40
35
30
25
20
15
10
5
0
−5
14'
12'−6"
MSD ROOM
FO WG TANK #2 (S)
FO WG TANK #1 (S)
BALLAST DB TANK #4 (S)
BALLAST WG TANK #3 (S)
WTB
WTB
WTB
WTB
WTB
WTB
WTB
WTB
FO DAY TK (S)
VOID #1 (S)
POTABLE WATER TANK (S)

HOLD LEVEL

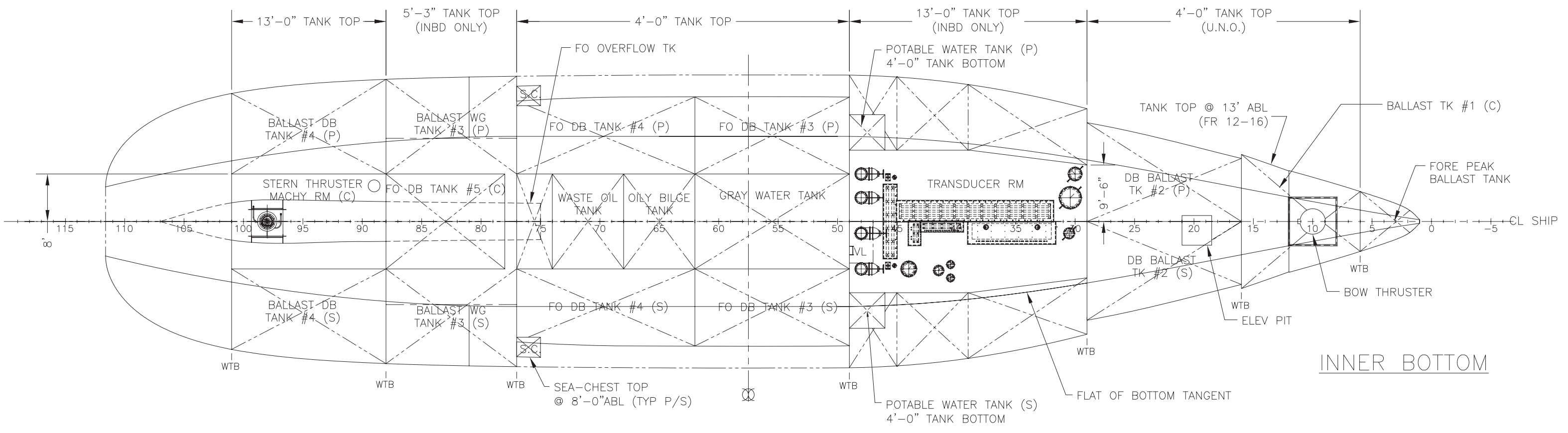
13'−0" TANK TOP
5'−3" TANK TOP (INBD ONLY)
4'−0" TANK TOP
13'−0" TANK TOP (INBD ONLY)
4'−0" TANK TOP (U.N.O.)
FO OVERFLOW TK
POTABLE WATER TANK (P) 4'−0" TANK BOTTOM
TANK TOP @ 13' ABL (FR 12−16)
BALLAST TK #1 (C)
FORE PEAK BALLAST TANK
BALLAST DB TANK #4 (P)
BALLAST WG TANK #3 (P)
SC
FO DB TANK #4 (P)
FO DB TANK #3 (P)
STERN THRUSTER MACHY RM (C)
FO DB TANK #5 (C)
WASTE OIL TANK
OILY BILGE TANK
GRAY WATER TANK
TRANSDUCER RM
9'−6"
DB BALLAST TK #2 (P)
DB BALLAST TK #2 (S)
CL SHIP
8'
115
110
105
100
95
90
85
80
75
70
65
60
55
50
45
40
35
30
25
20
15
10
5
0
−5
VL
BALLAST DB TANK #4 (S)
BALLAST WG TANK #3 (S)
FO DB TANK #4 (S)
FO DB TANK #3 (S)
BOW THRUSTER
ELEV PIT
WTB
WTB
WTB
WTB
WTB
WTB
WTB
WTB
SEA-CHEST TOP @ 8'−0"ABL (TYP P/S)
POTABLE WATER TANK (S) 4'−0" TANK BOTTOM
FLAT OF BOTTOM TANGENT

INNER BOTTOM

OC AGOR

HALF SIZE
PRINT

DESIGNER GUIDO PERLA & ASSOCIATES, Inc.	TITLE GENERAL ARRANGMENT DRAWINGS
SHIPBUILDER DAKOTA CREEK INDUSTRIES, Inc.	D DWG No. 65411−801−01 REV. A
NAVSEA DWG No. 8565942	SCALE 3/32" = 1'−0" SHEET: 3 OF 6

8 7 6 5 4 3 2 1

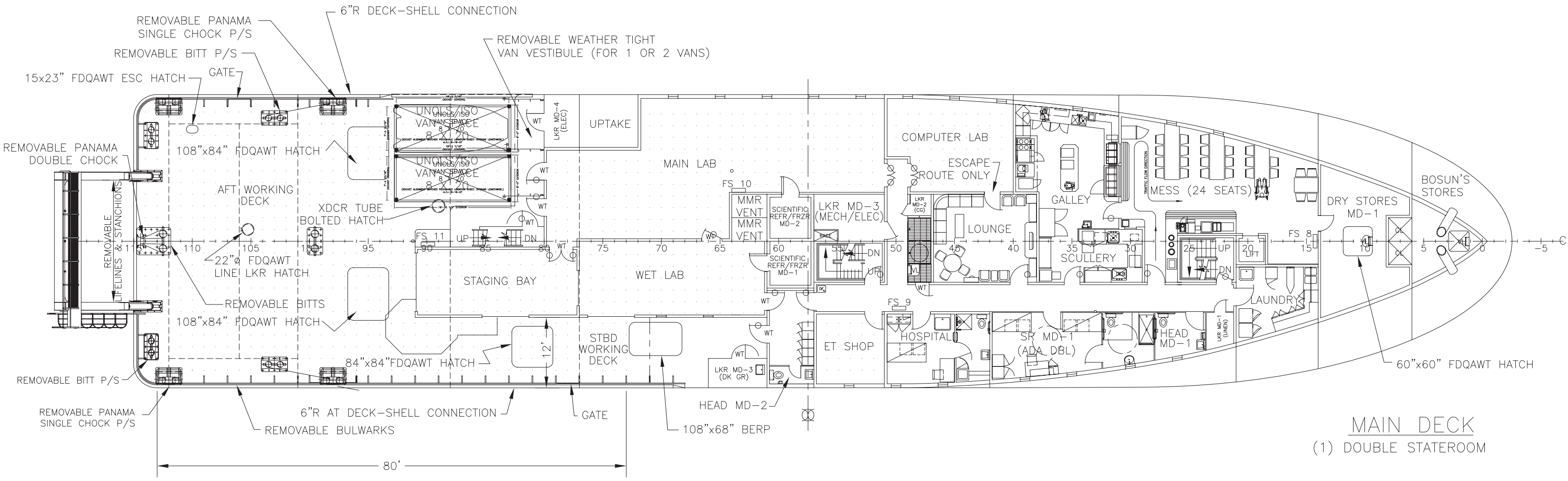
REMOVABLE PANAMA SINGLE CHOCK P/S
6"R DECK-SHELL CONNECTION
REMOVABLE WEATHER TIGHT VAN VESTIBULE (FOR 1 OR 2 VANS)
REMOVABLE BITT P/S
GATE
15x23" FDQAWT ESC HATCH
REMOVABLE PANAMA DOUBLE CHOCK
REMOVABLE LIFELINES & STANCHIONS
108"x84" FDQAWT HATCH
AFT WORKING DECK
UNOLS/ISO VAN SPACE 8'x20'
XDCR TUBE BOLTED HATCH
22"⌀ FDQAWT LINE LKR HATCH
REMOVABLE BITTS
108"x84" FDQAWT HATCH
84"x84" FDQAWT HATCH
REMOVABLE BITT P/S
REMOVABLE PANAMA SINGLE CHOCK P/S
REMOVABLE BULWARKS
6"R AT DECK-SHELL CONNECTION
GATE
108"x68" BERP
80'
UPTAKE
LKR MD-4 (ELEC)
MAIN LAB
STAGING BAY
WET LAB
STBD WORKING DECK
12'
FS 11
FS 10
MMR VENT
MMR VENT
SCIENTIFIC REFR/FRZR MD-2
SCIENTIFIC REFR/FRZR MD-1
LKR MD-3 (MECH/ELEC)
LKR MD-3 (DK GR)
HEAD MD-2
ET SHOP
COMPUTER LAB
ESCAPE ROUTE ONLY
LKR MD-2 (CS)
LOUNGE
GALLEY
SCULLERY
MESS (24 SEATS)
HOSPITAL
FS 9
SR MD-1 (ADA DBL)
HEAD MD-1
LKR MD-1 (LINEN)
LAUNDRY
DRY STORES MD-1
FS 8
BOSUN'S STORES
60"x60" FDQAWT HATCH
WT
UP
DN
LIFT
CL SHIP
115 110 105 100 95 90 85 80 75 70 65 60 55 50 45 40 35 30 25 20 15 10 5 0 -5

MAIN DECK

(1) DOUBLE STATEROOM

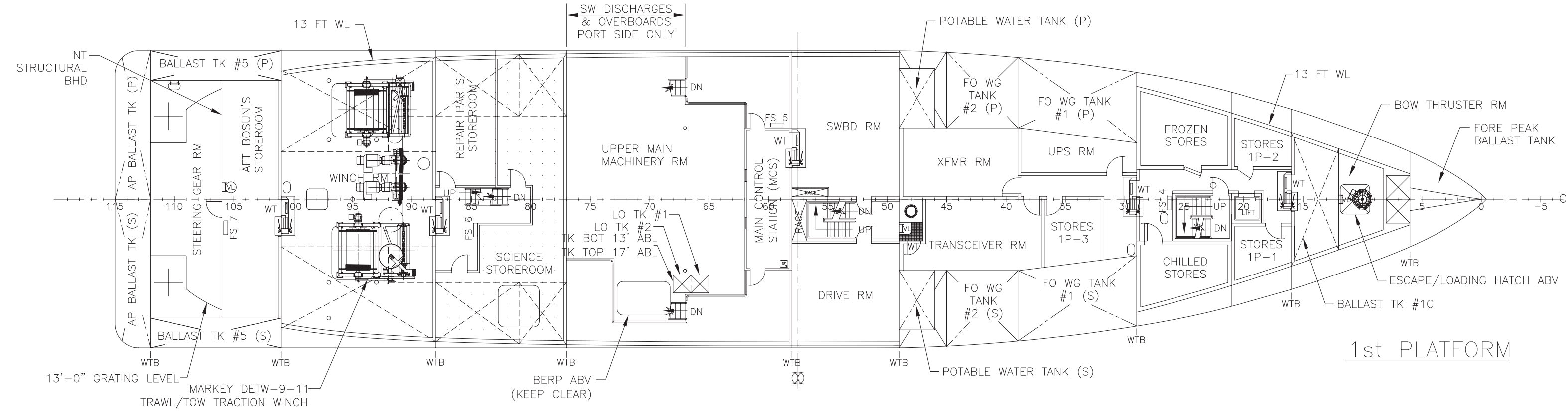
SW DISCHARGES & OVERBOARDS PORT SIDE ONLY
13 FT WL
NT STRUCTURAL BHD
BALLAST TK #5 (P)
AP BALLAST TK (P)
AP BALLAST TK (S)
STEERING GEAR RM
AFT BOSUN'S STOREROOM
FS 7
WINCH RM
REPAIR PARTS STOREROOM
FS 6
SCIENCE STOREROOM
UPPER MAIN MACHINERY RM
LO TK #1
LO TK #2
TK BOT 13' ABL
TK TOP 17' ABL
MAIN CONTROL STATION (MCS)
FS 5
SWBD RM
DRIVE RM
POTABLE WATER TANK (P)
FO WG TANK #2 (P)
FO WG TANK #1 (P)
XFMR RM
UPS RM
TRANSCEIVER RM
STORES 1P-3
FO WG TANK #2 (S)
FO WG TANK #1 (S)
FROZEN STORES
CHILLED STORES
FS 4
STORES 1P-2
STORES 1P-1
13 FT WL
BOW THRUSTER RM
FORE PEAK BALLAST TANK
ESCAPE/LOADING HATCH ABV
BALLAST TK #1C
BALLAST TK #5 (S)
13'-0" GRATING LEVEL
MARKEY DETW-9-11 TRAWL/TOW TRACTION WINCH
BERP ABV (KEEP CLEAR)
POTABLE WATER TANK (S)
WTB
WT
UP
DN
LIFT
CL SHIP
115 110 105 100 95 90 85 80 75 70 65 60 55 50 45 40 35 30 25 20 15 10 5 0 -5

1st PLATFORM

OC AGOR

HALF SIZE PRINT

DESIGNER GUIDO PERLA & ASSOCIATES, Inc.	TITLE GENERAL ARRANGMENT DRAWINGS
SHIPBUILDER DAKOTA CREEK INDUSTRIES, Inc.	D DWG No. 65411-801-01 REV. A
NAVSEA DWG No. 8565942	SCALE 3/32" = 1'-0" SHEET: 4 OF 6

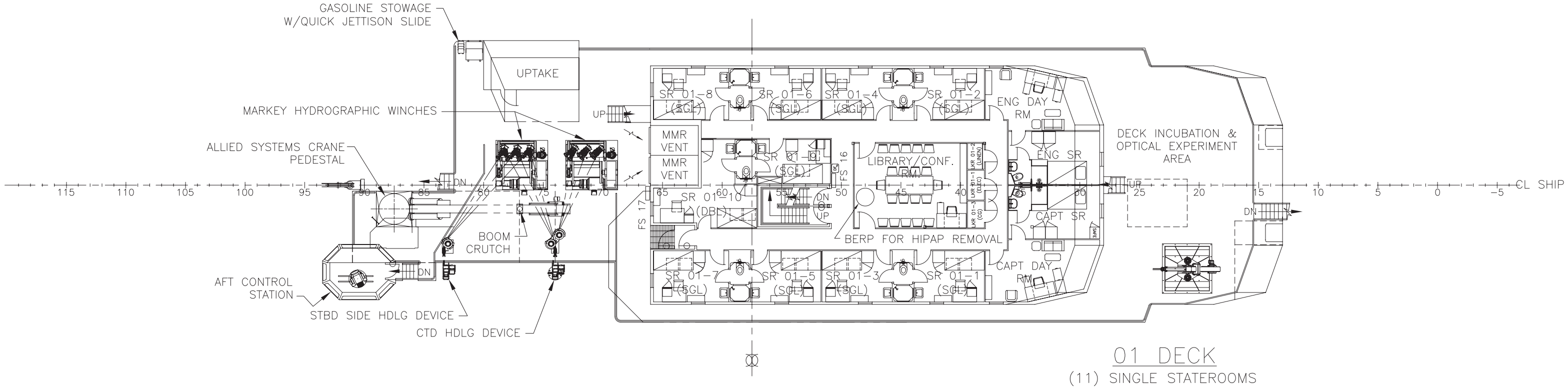
GASOLINE STOWAGE W/QUICK JETTISON SLIDE
UPTAKE
MARKEY HYDROGRAPHIC WINCHES
ALLIED SYSTEMS CRANE PEDESTAL
BOOM CRUTCH
AFT CONTROL STATION
STBD SIDE HDLG DEVICE
CTD HDLG DEVICE
MMR VENT
MMR VENT
SR 01-8 (SGL)
SR 01-6 (SGL)
SR 01-4 (SGL)
SR 01-2 (SGL)
SR 01-9 (SGL)
SR 01-10 (DBL)
SR 01-7 (SGL)
SR 01-5 (SGL)
SR 01-3 (SGL)
SR 01-1 (SGL)
LIBRARY/CONF. RM
BERP FOR HIPAP REMOVAL
ENG DAY RM
ENG SR
CAPT SR
CAPT DAY RM
DECK INCUBATION & OPTICAL EXPERIMENT AREA
FS 16
FS 17
UP
DN
CL SHIP
115 110 105 100 95 90 85 80 75 70 65 60 55 50 45 40 35 30 25 20 15 10 5 0 -5

01 DECK

(11) SINGLE STATEROOMS
(1) DOUBLE STATEROOM

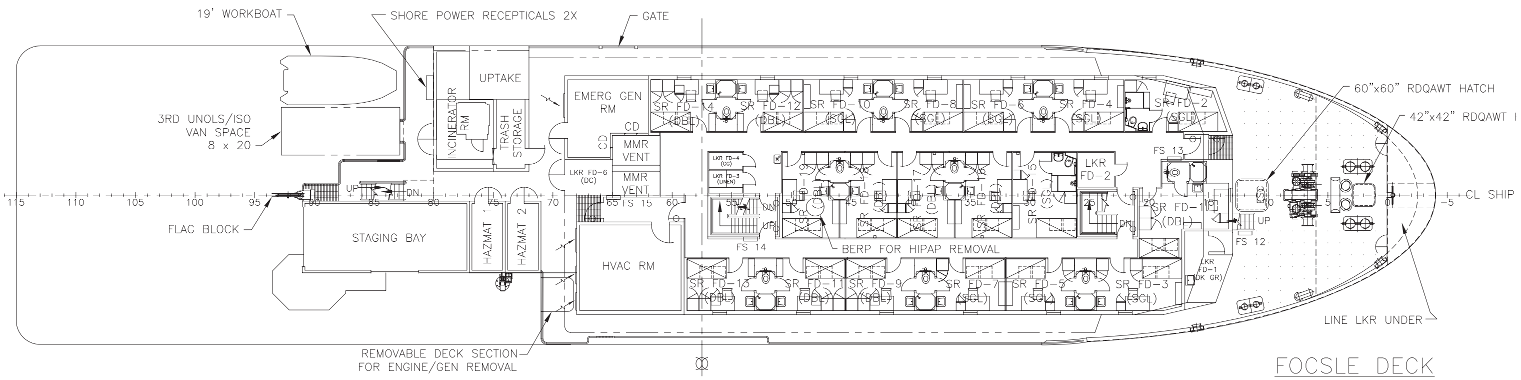
19' WORKBOAT
SHORE POWER RECEPTICALS 2X
GATE
3RD UNOLS/ISO VAN SPACE 8 x 20
FLAG BLOCK
INCINERATOR RM
UPTAKE
TRASH STORAGE
STAGING BAY
HAZMAT 1
HAZMAT 2
EMERG GEN RM
CD
MMR VENT
MMR VENT
LKR FD-6 (DC)
FS 15
FS 14
HVAC RM
SR FD-14 (DBL)
SR FD-12 (DBL)
SR FD-10 (SGL)
SR FD-8 (SGL)
SR FD-6 (SGL)
SR FD-4 (SGL)
SR FD-2 (SGL)
SR FD-13 (DBL)
SR FD-11 (DBL)
SR FD-9 (DBL)
SR FD-7 (SGL)
SR FD-5 (SGL)
SR FD-3 (SGL)
SR FD-1 (DBL)
LKR FD-2
LKR FD-1 (DK GR)
BERP FOR HIPAP REMOVAL
FS 13
FS 12
60"x60" RDQAWT HATCH
42"x42" RDQAWT I
LINE LKR UNDER
REMOVABLE DECK SECTION FOR ENGINE/GEN REMOVAL
UP
DN
CL SHIP
115 110 105 100 95 90 85 80 75 70 65 60 55 50 45 40 35 30 25 20 15 10 5 0 -5

FOCSLE DECK

(9) SINGLE STATEROOMS
(10) DOUBLE STATEROOMS

OC AGOR

HALF SIZE PRINT

DESIGNER
GUIDO PERLA & ASSOCIATES, Inc.

SHIPBUILDER
DAKOTA CREEK INDUSTRIES, Inc.

NAVSEA DWG No. 8565942

TITLE
GENERAL ARRANGMENT DRAWINGS

D
DWG No. 65411-801-01
REV. A

SCALE 3/32" = 1'-0"
SHEET: 5 OF 6

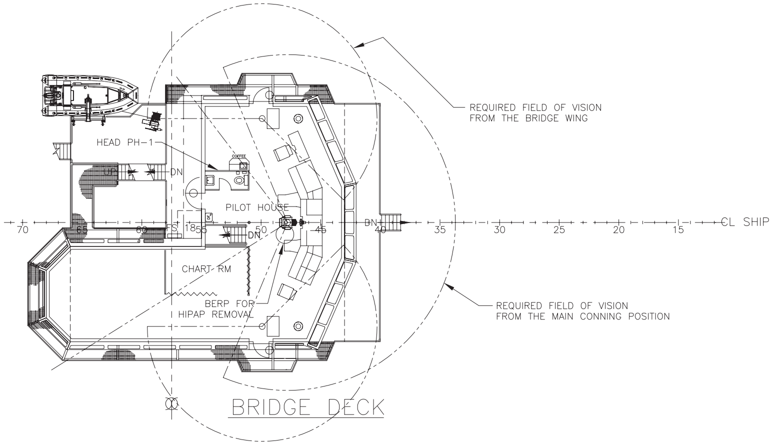

REQUIRED FIELD OF VISION FROM THE BRIDGE WING
REQUIRED FIELD OF VISION FROM THE MAIN CONNING POSITION
HEAD PH-1
UP
DN
PILOT HOUSE
CHART RM
BERP FOR HIPAP REMOVAL
70
65
60
55
50
45
40
35
30
25
20
15
CL SHIP

BRIDGE DECK

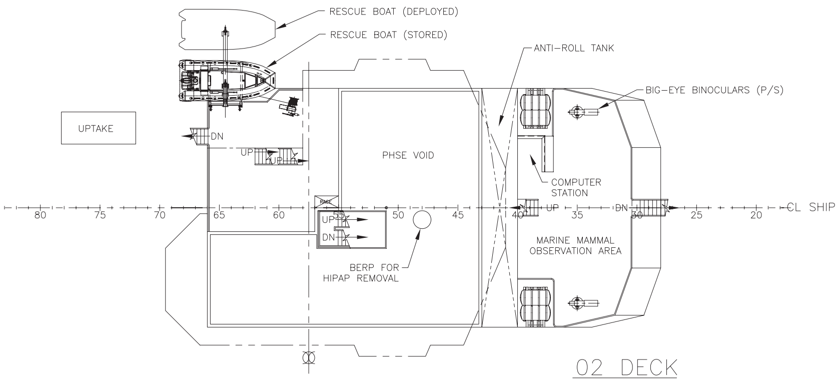

RESCUE BOAT (DEPLOYED)
RESCUE BOAT (STORED)
ANTI-ROLL TANK
BIG-EYE BINOCULARS (P/S)
UPTAKE
DN
UP
PHSE VOID
COMPUTER STATION
BERP FOR HIPAP REMOVAL
MARINE MAMMAL OBSERVATION AREA
80
75
70
65
60
50
45
40
35
30
25
20
CL SHIP

02 DECK

OC AGOR

DESIGNER GUIDO PERLA & ASSOCIATES, Inc.	TITLE GENERAL ARRANGMENT DRAWINGS	
SHIPBUILDER DAKOTA CREEK INDUSTRIES, Inc.	D DWG No. 65411-801-01	REV. A
NAVSEA DWG No. 8565942	SCALE 3/32" = 1' - 0"	SHEET: 6 OF 6

HALF SIZE PRINT